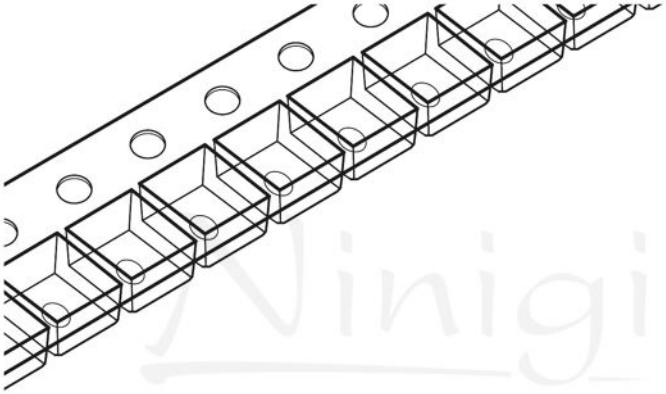

Symbol:	MUSBB-G3.0/SMD
Product groups:	USB & IEEE1394 connectors

Product specifications

Type of connector:	USB B micro
Connector:	socket
Electrical mounting:	SMT
Number of pins:	10
Version:	USB 3.0

Additional information

Gross weight:	0.001 kg